FX-PIX-HAZ

FX-PIX-HAZ Industrial Workstation for Hazardous Locations

DYNICS FX-PIX-HAZ Workstations are industrial panel PCs with your choice of motherboard, processor, expansion slot (0, 1 or 2), RAM, storage, and operating systems. These custom NEMA 4 / NEMA 4X rated configurations make the FX-PIX-HAZ an ideal solution for use in Hazardous Location applications.

- Class I Division 2, Class II Division 2, & Class III Approved
- UL, cUL, & CE Certified
- 55°C Max Operating Temp
- Analog Resistive touchscreen or Protective Polycarbonate Lens
- 100~240VAC / 24VDC
- 2.5" SATA SSD and HDD Options
- 0 / 1 / 2 Slots (Half-Size Cards)
- NEMA 4 / NEMA 4X Panel Mount
- 24-Month Warranty

DISPLAY SPECIFICATIONS

SIZE	15"	17"	19"
RESOLUTION	XGA 1024 x 768	SXGA 1280 x 1024	SXGA 1280 x 1024
VIEW ANGLE	H: -80°/+80°, V: -80°/+70°	H: -85°/+85°, V: -80°/+80°	H: -85°/+85°, V: -80°/+80°
CONTRAST	800:1	1000:1	1000:1
BRIGHTNESS	300 nits	350 nits	350 nits
ASPECT RATIO	4:3	5:4	5:4
LENS	5-Wire Analog Resistive Touch Screen / Protective Polycarbonate Lens (Non-Touch) USB / Serial Output Connection		
LCD LIFE	50,000 Hour Backlight Half-Life		
ENCLOSURE	NEMA 4 Powder Coat Finish (Black) / NEMA 4X Stainless Steel		

620 TECHNOLOGY DRIVE, ANN ARBOR, MI 48108 | PH: 734.677.6100 | FAX: 734.677.6105 | WWW.DYNICS.COM

INDUSTRIAL WORKSTATION FOR HAZARDOUS LOCATIONS

FX-PIX-HAZ

WORKSTATION SPECIFICATIONS

COMPUTER I/O	Mini-ITX Q170	Mini-ITX Q370
1Gb Ethernet Port (Supporting Intel® AMT)	1x	1x
1Gb Ethernet Port	1x	1x
RS232/422/485 Ports	1x	1x
USB 3.0 Ports	4x	4x
USB 2.0 Ports	4x	4x
PS/2 Port	2x	2x
DVI-D Port	1x	1x
DisplayPorts V1.2	2x	2x
Audio Jacks	2x	2x
CPU/ CPU SPEED	6th Gen Quad Core™ i5-6500TE, up to 3.3 GHz, 6MB Cache 6th Gen Quad Core™ i7-6700TE, up to 3.4 GHz, 8MB Cache	8th Gen Hexa Core™ i5-8500T, up to 3.5 GHz, 9MB Cache 8th Gen Hexa Core™ i7-8700T, up to 4.0 GHz, 12MB Cache
MEMORY	Up to 32GB DDR4	
EXPANSION SLOTS	**PIX0** No PCI Slot Panel PC Module **PIX1** 1 PCI Slot Panel PC Module **PIXE** 1 PCIe x16 Slot Panel PC Module **PIX2** 2 PCI Slot Panel PC Module **PIX1E** 1 PCI + PCIe x16 Slot Panel PC Module	
STORAGE	240GB - 2TB SATA SSD / 1TB HDD (RAID Option Available)	
OPERATING SYSTEM	Windows® 7 Professional (64-bit) (Q170 only) Windows® Embedded Standard 7 (64-bit) (Q170 only) Windows® 10 Enterprise IoT LTSB 2019 (64-bit) Windows® 10 Enterprise IoT LTSC 2016 (64-bit) Linux Ubuntu	
POWER ENTRY	100~240 VAC, 2.0 Amp / 24 VDC , 7.0 Amp (3-Pin Power Entry approved for Hazardous Locations)	
TEMPERATURE	Operating: 0° - 55°C (32° - 131°F) | Non-Operating: -25° - 60°C (-13° - 140°F)	
RELATIVE HUMIDITY	Non-Condensing: 20% - 80%	
SHOCK RESISTANCE	Operating: 10G | Non-Operating: 15G	
VIBRATION	Operating: 1.0G from 57~2000Hz | Non-Operating: 2.5G from 57~2000Hz	
COMPLIANCE	USA: UL 121201 (UL Listed), UL 61010-1 (UL Listed), UL 61010-2-201 (UL Listed), FCC 47 CFR Part 15, Class A Canada: CSA C22.2 No. 213 (cUL Listed), CSA C22.2 No. 61010-1-12 (cUL Listed), CSA C22.2 No. 61010-2-201 (cUL Listed), ICES-001, Group 1, Class A European Union CE: EN 50581 (RoHS), EN 61326-1 (CISPR 11,Group 1,Class A), EN 61010-1, EN 61010-2-201 International: IEC 61010-1 (UL CB), IEC 61010-2-201 (UL CB)	
HAZARDOUS LOCATIONS DETAILS	Class I Division 2, Groups A, B, C, and D, Class II Division 2, Groups F and G, and Class III Temp Code: T4A **Note:** Must be installed in an enclosure suitable for the environment, such that the equipment is only accessible with the use of a tool. Also requires applicable wiring standards for the application to be certified. Consult local codes for details and requirements.	
WARRANTY	24-Month limited warranty. Extended warranty available, contact DYNICS for more details	

620 TECHNOLOGY DRIVE, ANN ARBOR, MI 48108 | PH: 734.677.6100 | FAX: 734.677.6105 | WWW.DYNICS.COM

FX-PIX-HAZ

DIMENSIONS, WEIGHT, & POWER CONSUMPTION

		15"	17"	19"
HEIGHT (Bezel)		11.9" (302.3mm)	14.0" (355.6mm)	15.4" (391.2mm)
WIDTH (Bezel)		15.8" (401.3mm)	17.8" (452.1mm)	18.8" (477.5mm)
HEIGHT (Cutout)		11.3" (287.0mm)	13.0" (330.2mm)	14.4" (365.8mm)
WIDTH (Cutout)		15.3" (388.6mm)	16.7" (424.2mm)	17.8" (452.1mm)
DEPTH ***	**PIX0**	3.7" (94.0mm)	3.7" (94.0mm)	3.7" (94.0mm)
	PIX1	5.5" (139.7mm)	5.5" (139.7mm)	5.5" (139.7mm)
	PIX2	6.6" (167.6mm)	6.6" (167.6mm)	6.6" (167.6mm)
	PIXE	5.5" (139.7mm)	5.5" (139.7mm)	5.5" (139.7mm)
	PIX1E	6.6" (167.6mm)	6.6" (167.6mm)	6.6" (167.6mm)
WEIGHT	**PIX0**	22 lbs. (10.0kg)*	25 lbs. (11.3kg)*	28 lbs. (12.7kg)*
	PIX1	26 lbs. (11.8kg)*	28 lbs. (12.7kg)*	31 lbs. (14.0kg)*
	PIX2	33 lbs. (15.0kg)*	35 lbs. (15.9kg)*	38 lbs. (17.2kg)*
	PIXE	26 lbs. (11.8kg)*	28 lbs. (12.7kg)*	31 lbs. (14.0kg)*
	PIX1E	33 lbs. (15.0kg)*	35 lbs. (15.9kg)*	38 lbs. (17.2kg)*
MINI-ITX Q170		115 Watts**	125 Watts**	125 Watts**
MINI-ITX Q370		145 Watts**	155 Watts**	155 Watts**

* Weights are approximate, contact DYNICS for details.
** Power consumption is based on maximum ratings; actual ratings vary significantly based on components used.
*** Depth Dimension is from rear of bezel. For overall dimensions; add 0.25" (6.4mm) for aluminum bezel or 0.13" (3.3mm) for stainless steel bezel.

MECHANICAL DRAWINGS

FRONT VIEW

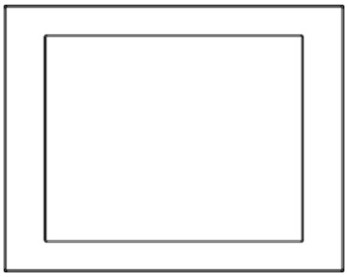

BACK VIEW

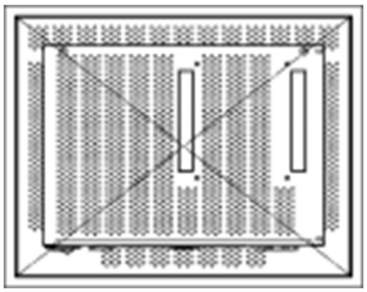

SIDE AND I/O VIEW (PIX0)

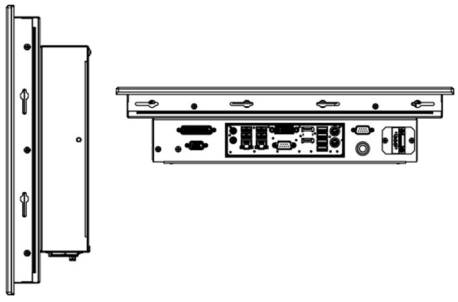

SIDE AND I/O VIEW (PIX1/PIXE)

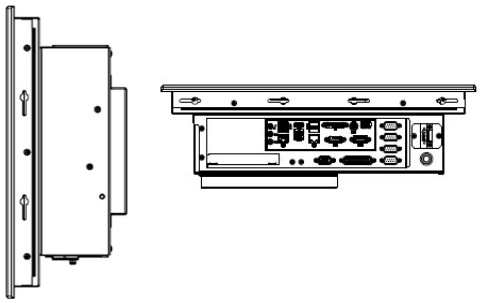

SIDE AND I/O VIEW (PIX2/PIX1E)

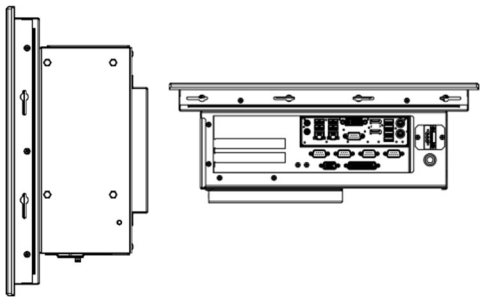

All measurements are in inches and pounds, unless noted. Pictures and drawings are not to scale. Estimated weight may change depending on options.

620 TECHNOLOGY DRIVE, ANN ARBOR, MI 48108 | PH: 734.677.6100 | FAX: 734.677.6105 | WWW.DYNICS.COM

FX-PIX-HAZ

MARKING DETAILS

Ind. Cont. Eq.

c UL US LISTED E509663

CE

Dynics, Inc.
620 Technology Dr.
Ann Arbor, MI,
48108 USA

For Use on a Flat Surface of a Type 1, 4, 4x, or 12 Enclosure

Class I, Division 2, Groups A, B, C, and D Class II, Division 2, Groups F and G, and Class III Hazardous Locations; T4A

Surrrounding Air Temp: 0C to +55C

Power rating is maximum for series. For actual power rating see datasheet.

Made in the USA

This device complies with Part 15 of the FCC Rules. Operation is subject to the following two conditions: (1) this device may not cause harmful interference, and (2) this device must accept any interference received, including interference that may cause undesired operation.
This ISM device complies with Canadian ICES-001.
Cet appareil ISM est conforme à la norme NMB-001 du Canada.

POWER ENTRY OPTIONS

AC INPUT (-HA)

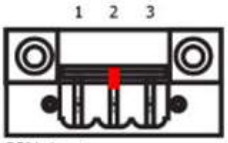

PIN 1: L
PIN 2: ⏚ (Chassis GND)
PIN 3: N

Note: Red keys prevent inadvertent substitution of AC and DC plugs.

DC INPUT (-HD)

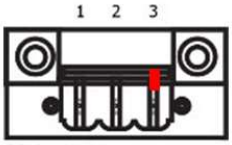

PIN 1: V+
PIN 2: ⏚ (Chassis GND)
PIN 3: V-

All measurements are in inches and pounds, unless noted. Pictures and drawings are not to scale. Estimated weight may change depending on options.
DYNICS Reserves the right to change, modify, upgrade, or discontinue any part of this datasheet without any prior notice